Asymmetric Multi-Function Single | Overbed Recessed

BalancedCare™

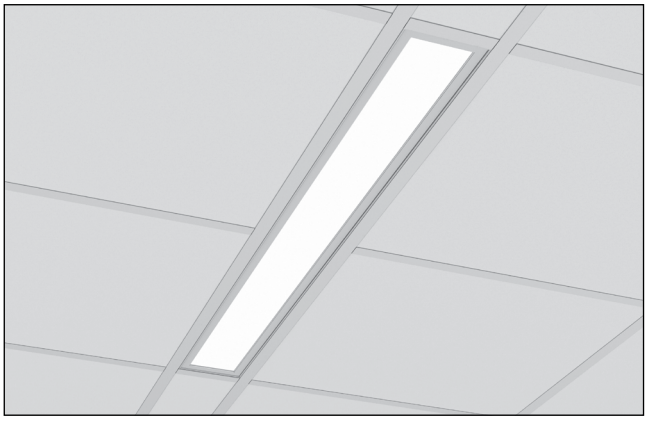

Project _____

Type _____

Notes _____

- BeWell™ light guide transitions from soft ambient to high powered exam to deliver multi-functional optics without segmented compartments, transition lines, or pixelation
- 3 Functional modes: Ambient, Exam, and Reading
- Mounts offset from bed to eliminate shadows & clear center ceiling
- Modular optical chamber with room-side access available to order separately
- Sealed, seamless construction provides smooth surface for cleanability
- Controls and sensor ready
- Compatible with common pillow speaker controls
- Duo - 6''x48'' sold in pairs (2 luminaires) also
- Number of circuits corresponds to number of functions; i.e., for ambient and exam, two circuits are standard; if reading light is selected, three circuits are standard (not selectable options)

*See performance chart on page 6.

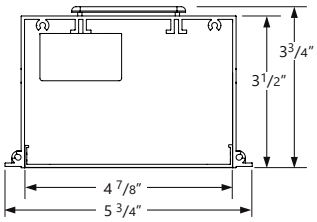

*Nominal length - 4'

2021 Silver Winner GRANDS PRIX DU DESIGN

CCEA APPROVED · BeSealed CONSTRUCTION · NSF · IP64 · BeWell CONTROLS · BeWell TECHNOLOGIES · BeWell OPTICS · Axitune Tunable White · PoE · c UL us Listed · Control Sensors · IC cULus Listed Type I.C. · LED BOARD & DRIVER 5 YEAR LIMITED WARRANTY

*Patent pending.

Ordering Guide

BCASY1									
PRODUCT ID		**NOMINAL LENGTH (FT)**		**CRI**		**COLOR TEMP.**		**READING (OPTIONAL)**	
BCASY1	Asymmetric Single	**4**	4' (2400lm-ambient, 7700lm-exam)	**80**	80 CRI	**30**	3000 K (!)	**RDL30**	reading light aimed left 3000K*
				90	90 CRI	**35**	3500 K (!)	**RDL35**	reading light aimed left 3500K*
						40	4000 K (!)	**RDL40**	reading light aimed left 4000K*
						TW2750	2700 K-5000 K - Tunable White*	**RDR30**	reading light aimed right 3000K*
								RDR35	reading light aimed right 3500K*
								RDR40	reading light aimed right 4000K*
		Consult factory for other lengths. See page 6 for performance chart.				(!) Selected CCT will be the same for both ambient and exam functions. *Consult Axitune technical sheet for more information on color technology. *TW2750 available for ambient function only. *When TW2750 is selected, exam CCT is 3500K.		When Reading is selected a 3rd circuit is standard. *Reading light CCT can differ from any color temp selected for ambient and exam functions.	

FINISH		**VOLTAGE**		**DRIVER**		**EMERGENCY (OPT.)**		**LV CONTROLLER (OPT.)**	
AMW	antimicrobial white*	**120**	120 V	**DP**	dimming (0-10V) 1%	**GTD(#)**	generator transfer device*	**LVC1**	low voltage controller (Mode 1)
W	white	**277**	277 V	**LT(#)**	Lutron*	**+E(#)**	emergency section *	**LVC2**	low voltage controller (Mode 2)
C	custom**	**347**	347 V	**O(#)**	other**			**LVCD3**	low voltage controller (Mode 3 step dim)
		UNV	universal	**TW(#)**	tunable white drivers*			**LVCD4**	low voltage controller (Mode 3 smooth dim)
		DC	low voltage*	**POE(#)**	POE drivers*			**LVCD5**	low voltage controller (Mode 4 step dim)
								LVCD6	low voltage controller (Mode 4 smooth dim)
* Standard colour ** Consult factory for NSF		*Only available with POE.		*See page 3 to specify system **Please consult factory; see page 3		* Specify quantity.		Not available with 347V Please consult factory For compatibility with control devices, such as pillow speaker handset. See wiring diagrams on page 4-5.	

MOUNTING/SUSPENSION		**BATTERY (OPTIONAL)**		**OTHER (OPTIONAL)**	
TB15	t-bar 15/16"	**B(#)**	battery pack	**F**	fuse*
DF	drywall flange				
		Not available with 347V Please consult factory		*Requires 120V or 277V	

Accessories ordered separately. See Accessories ordering guide.

Optical chamber available to order separately. See page 2.

© 2020 BalancedCare™ by Axis Lighting Inc.

1.800.263.2947 | 514.948.6272

BalancedCare™ by axis

balancedcare.axislighting.com

Modular optical chamber is available as optional shelf stock for easy maintenance change-out; ordered separately.

Optical Chamber Ordering Guide

BCASY1									
PRODUCT ID		NOMINAL LENGTH (FT)		CRI		COLOR TEMP.		READING (OPTIONAL)	
BCASY1	Asymmetric Single	**OC4**	optical chamber 4' (2400lm-ambient, 7700lm-exam)	**80**	80 CRI	**30**	3000 K (!)	**RDL30**	reading light aimed left 3000K*
				90	90 CRI	**35**	3500 K (!)	**RDL35**	reading light aimed left 3500K*
						40	4000 K (!)	**RDL40**	reading light aimed left 4000K*
						TW2750	2700 K-5000 K - Tunable White*	**RDR30**	reading light aimed right 3000K*
								RDR35	reading light aimed right 3500K*
								RDR40	reading light aimed right 4000K*
		Consult factory for other lengths. See page 6 for performance chart.				(!) Selected CCT will be the same for both ambient and exam functions. *Consult Axitune technical sheet for more information on color technology. *TW2750 available for ambient function only. *When TW2750 is selected, exam CCT is 3500K.		When Reading is selected a 3rd circuit is standard. *Reading light CCT can differ from any color temp selected for ambient and exam functions.	

		NA		NA		NA		NA	
FINISH		VOLTAGE		DRIVER		EMERGENCY (OPT.)		LV CONTROLLER (OPT.)	
AMW	antimicrobial white	**NA**	not applicable	**NA**	not applicable	**NA**	not applicable	**NA**	not applicable
W	white								
C	custom*								
* Consult factory for NSF.									

NA		NA		NA	
MOUNTING/SUSPENSION		BATTERY (OPTIONAL)		OTHER (OPTIONAL)	
NA	not applicable	**NA**	not applicable	**NA**	not applicable

Accessories ordered separately. See Accessories ordering guide. CLICK!

Optical Chamber Replacement

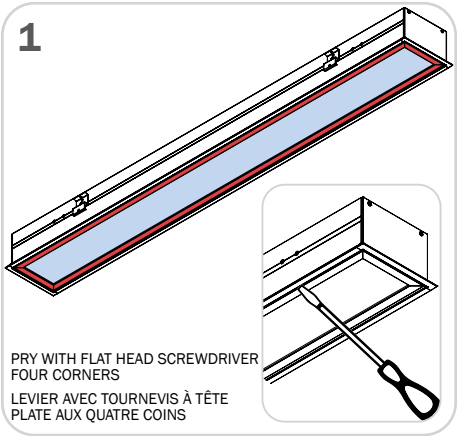

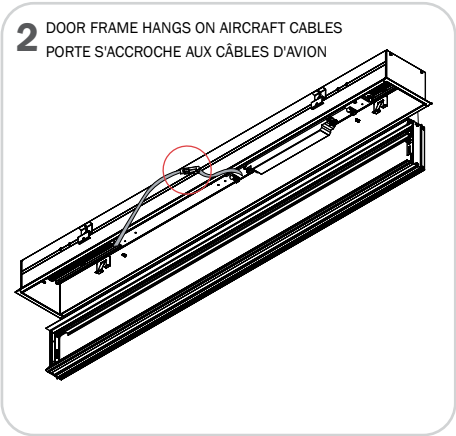

© 2020 BalancedCare™ by Axis Lighting Inc.

1.800.263.2947 | 514.948.6272
BalancedCare™ by axis
balancedcare.axislighting.com

CONSTRUCTION

Housing	Extruded aluminum (0.090" nominal) Up to 70% recycled content
Door frame	Extruded aluminum (0.060" nominal)
Reflectors	Specular aluminum (24 gauge)
Lens	Lenticular acrylic lens

ELECTRICAL

Lutron driver*	**LDE1** - Hi-lume 1% EcoSystem with Soft-on, Fade-to-Black **LTEA** - Hi-lume 1% 2-wire (120V forward phase only) *Consult factory
Other drivers**	**DALI** - Digital Addressable Lighting Interface **DMX** - Digital Multiplex **LV** - line voltage - Advance Mark 10 **Xitanium SR** - For wireless sensor
Tunable White TW drivers*	**DALIDT6** - DALI Type 6 (Two DALI Addresses) **DALIDT8** - DALI Type 8 (One DALI Address) **LTTW** - Lutron T-Series Tunable White
Power over Ethernet POE drivers* UL2108 certified for integral or remote driver	MOLEX IGOR **O** - Other (Consult factory)
Emergency	Integral emergency battery pack or emergency circuit optional.
Input Voltage	120V, 277V, 347V, UNV, DC.
Flex Whip	Shipped in a separate box for contractors to install

*Choose driver from available options.

Incorporating these components may have limitations or affect the length of the luminaire. Please contact factory for more details.

WARRANTY

BalancedCare™ by Axis Lighting will warrant defective LEDs, boards, and drivers for 5 years from date of purchase. Warranty is valid if luminaire is installed and used according to specifications.
If defective, BalancedCare™ will send replacement boards or drivers at no cost along with detailed replacement instructions and instructions on how to return defective components to BalancedCare™.

LED SYSTEM

CRI	Minimum 80 or 90 color rendering index options.
CCT Single Color	Choice of 3000K, 3500K and 4000K color temperature with a great color consistency (within 3–step MacAdam ellipse). Both within fixture and fixture to fixture.
CCT Axitune Systems	Consult Axitune technical sheet for more information on color technology.
LED life	Minimum 50,000h with 85% of lumen maintenance in 25°C ambient temperature, in compliance with IES LM-80 testing measurements.
Thermal Managemen	Aluminum housing acting as the heat sink to maximize life.
Environment	For all line voltage driver, dry and damp rated in operating ambient temperature of -20° to +40°C (-4° to +104°F) For POE driver option, dry and damp rated in operating ambient temperature of 0° to +40°C (+32° to +104°F) Consult factory for temperature outside this range.

OPTICS

BeWell™ Optics

BalancedCare™ BeWell™ light guide technology provides multiple precise distribution options to deliver the many layers of light required in healthcare environments.

APPROVALS

With product features that promote cleanability and durability, BalancedCare™ meets functional and application-specific industry listings such as UL, Ingress Protection (IP) and National Sanitation Foundation (NSF) standards.

WEIGHT

Recessed LED 4 ft	17 lbs / 7.7 kg

FINISHES

Powder coated and custom finishes are also available.
Standard finishes are NSF rated.

TB AND DRYWALL CEILING MOUNTING OPTIONS

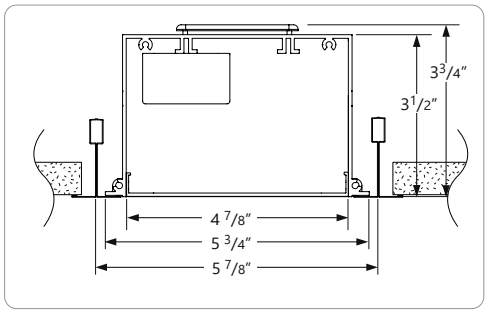

TB15 15/16" T-BAR

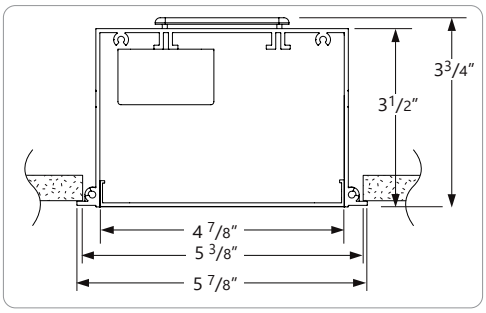

DF VISIBLE FLANGES WITH 1/4-20 STUD MOUNTING

© 2020 BalancedCare™ by Axis Lighting Inc.
1.800.263.2947 | 514.948.6272
BalancedCare™ by axis
balancedcare.axislighting.com

● *LOW VOLTAGE CONTROLLERS - CONFIGURATIONS*

		MODE #1 (DEFAULT)	MODE #2	MODE #3		MODE #4	
		Ambient Light and Reading Light Independent (ON/OFF), Exam Light	Ambient Light and Reading Light Sequential, Exam Light	Ambient Light Dimming, Reading Light Independent (ON/OFF), Exam Light		Ambient Light and Reading Light Dimming, Exam Light	
				Step Dimming (one direction)	Smooth Dimming (two direction)	Step Dimming (one direction)	Smooth Dimming (two direction)
Toggling Switch 1 (Pillow Speakers, wall switch) affects Ambient Light as follows:	**First Toggle**	Ambient ON	Ambient ON, Reading Light OFF	Ambient ON, Full brightness	First toggle: Ambient ON, dim level set to Approx. 100% brightness Subsequent sustained presses: smooth dimming* Second toggle: Ambient OFF	Ambient ON, Full brightness dimming	First toggle: Ambient ON, dim level set to Approx. 100% brightness Subsequent sustained presses: smooth dimming* Second toggle: Ambient OFF
	Second Toggle	Ambient OFF	Ambient OFF, Reading Light ON	Ambient ON, Approx. 60% (4 VDC) brightness		Ambient ON, Approx. 60% (4 VDC) brightness	
	Third Toggle	-	Ambient ON, Reading Light ON	Ambient ON, Approx. 30% (1.37 VDC) brightness		Ambient ON, Approx. 30% (1.37 VDC) brightness	
	Fourth Toggle	-	Ambient OFF, Reading Light OFF	Ambient ON, Approx. 10% (0.8 VDC) brightness		Ambient ON, Approx. 10% (0.8 VDC) brightness	
	Fifth Toggle	-	-	Ambient OFF		Ambient OFF	
Toggling Switch 2 (Pillow Speakers, wall switch) affects Reading Light as follows:	**First Toggle**	Reading Light ON	-	Reading ON	Reading ON	Reading ON, Full brightness	First toggle: Reading ON, dim level set to Approx. 100% brightness Subsequent sustained presses: smooth dimming* Second toggle: Reading OFF
	Second Toggle	Reading Light OFF	-	Reading OFF	Reading OFF	Reading ON, Approx. 60% (4 VDC) brightness	
	Third Toggle	-	-	-	-	Reading ON, Approx. 30% (1.37 VDC) brightness	
	Fourth Toggle	-	-	-	-	Reading ON, Approx. 10% (0.8 VDC) brightness	
	Fifth Toggle	-	-	-	-	Reading OFF	
Toggling Switch 3 (Pillow Speakers, wall switch) affects Exam Light as follows:	**First Toggle**	Ambient and Exam maximum brightness	Ambient and Exam maximum brightness	Ambient and Exam maximum brightness	Ambient and Exam maximum brightness	Ambient and Exam maximum brightness	Ambient and Exam maximum brightness
	Second Toggle	Ambient returns to previous setting, Exam OFF	Ambient returns to previous setting, Exam OFF	Ambient returns to previous setting, Exam OFF	Ambient returns to previous setting, Exam OFF	Ambient returns to previous setting, Exam OFF	Ambient returns to previous setting, Exam OFF

© 2020 BalancedCare™ by Axis Lighting Inc.

LOW VOLTAGE CONTROLLERS WIRING DIAGRAMS

WIRING DIAGRAM 1

AMBIENT, READING, AND EXAM INDEPENDENT ON/OFF (NO DIMMING)

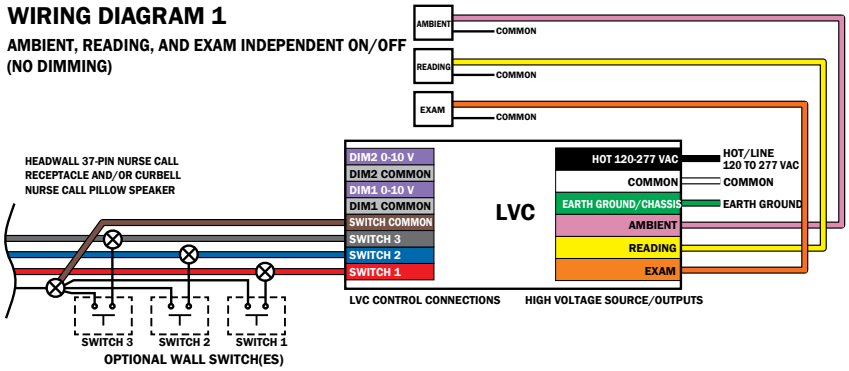

1. LVC Mode 1 (independent ON/OFF no dimming, EXAM mode on switch 3) DEFAULT mode.

WIRING DIAGRAM 2

AMBIENT AND READING SEQUENTIAL

EXAM INDEPENDENT ON/OFF (NO DIMMING)

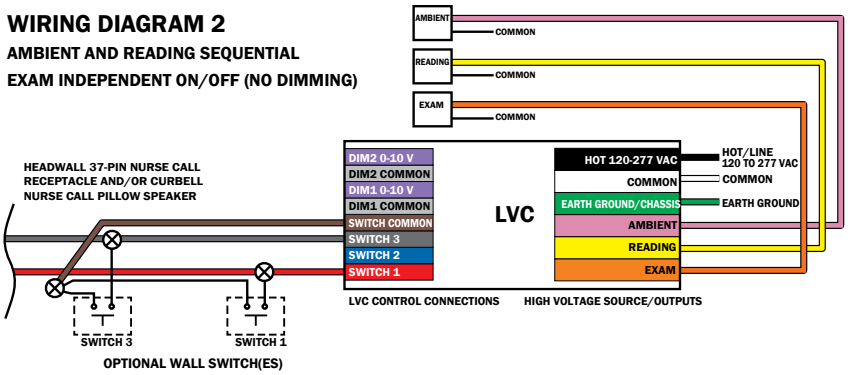

2. LVC Mode 2 (sequential ON/OFF no dimming, EXAM mode on switch 3)

WIRING DIAGRAM 3

AMBIENT INDEPENDENT (WITH DIMMING)

READING AND EXAM INDEPENDENT ON/OFF (NO DIMMING)

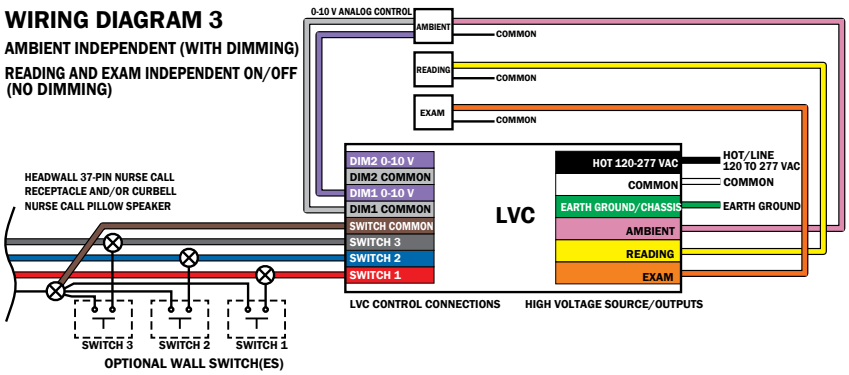

3. LVCD Mode 3 step dimming (Ambient dimming, Reading Light ON/OFF, EXAM mode on switch 3)
4. LVCD Mode 3 smooth dimming (Ambient dimming, Reading Light ON/OFF, EXAM mode on switch 3)

WIRING DIAGRAM 4

AMBIENT AND READING INDEPENDENT (WITH DIMMING)

EXAM INDEPENDENT ON/OFF (NO DIMMING)

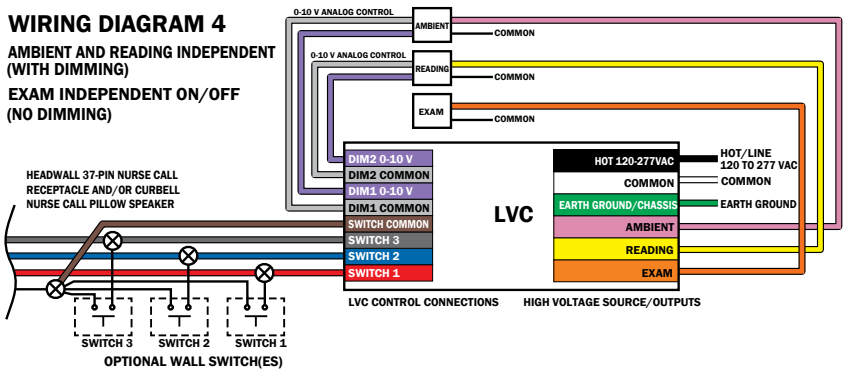

5. LVCD Mode 4 step dimming (Ambient and Reading Light dimming, EXAM mode on switch 3)
6. LVCD Mode 4 smooth dimming (Ambient and Reading light dimming, EXAM mode on switch 3)

© 2020 BalancedCare™ by Axis Lighting Inc.

1.800.263.2947 | 514.948.6272

BalancedCare™ by axis
balancedcare.axislighting.com

PERFORMANCE AT 3500K

FUNCTION	NOMINAL LUMEN OUTPUT	INPUT WATTS*	EFFICACY	Estd. L80 LED Life (hrs.)
AMBIENT	2400 lm	27.69 W	88 lm/W	50000
EXAM	7700 lm	94.46 W	81 lm/W	50000
READING LIGHT**	1132 lm	8.32 W	136 lm/W	50000

* Based on a 4 foot luminaire using one driver
** Reading Light at 3000K.
Please consult factory for custom lumen output and wattage.

● PHOTOMETRIC DATA

Ambient light left

2400 lm

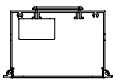

PHOTOMETRIC CURVE

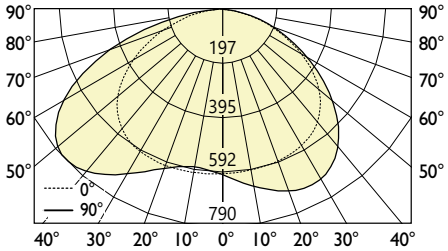

Luminaire Lumens: 2445 Lm
Input Watts: 27.69 W
Efficacy: 88 lm/W

IES FILE: BCASY1-4-80-35-LEFT-AMB
TESTED ACCORDING TO IES LM-79-2008

CANDELA DISTRIBUTION

Vertical Angle	Horizontal Angles 0	22.5	45	67.5	90
0	605	605	605	605	605
5	602	611	620	626	629
15	598	624	653	676	685
25	591	627	671	709	724
35	570	603	649	690	706
45	517	536	571	604	611
55	418	423	450	468	462
65	284	285	304	310	298
75	143	145	154	155	147
85	26	28	30	30	29
90	1	1	1	1	1

ZONAL LUMENS

Zone	Lumens
0	
0-10	58
10-20	177
20-30	297
30-40	404
40-50	467
50-60	453
60-70	353
70-80	193
80-90	43
90	

LUMINANCE DATA (cd/m²)

Vertical Angle	Horizontal Angles 0	45	90
45	6967	7697	8233
55	6951	7475	7678
65	6394	6859	6725
75	5273	5682	5415
85	2849	3262	3187

Ambient light right

2400 lm

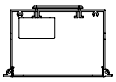

PHOTOMETRIC CURVE

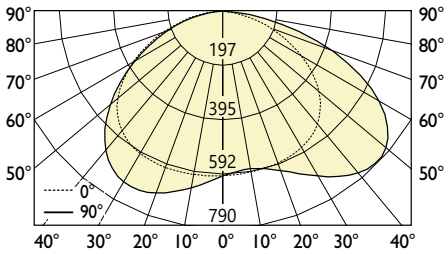

Luminaire Lumens: 2445 Lm
Input Watts: 27.69 W
Efficacy: 88 lm/W

IES FILE: BCASY1-4-80-35-RIGHT-AMB
TESTED ACCORDING TO IES LM-79-2008

CANDELA DISTRIBUTION

Vertical Angle	Horizontal Angles 0	22.5	45	67.5	90
0	605	605	605	605	605
5	606	599	594	591	591
15	608	594	592	597	598
25	605	593	611	644	658
35	587	587	635	708	741
45	535	556	631	740	790
55	435	473	560	681	738
65	295	335	411	509	558
75	149	170	211	263	290
85	28	30	37	44	49
90	1	1	1	1	1

ZONAL LUMENS

Zone	Lumens
0	
0-10	58
10-20	177
20-30	297
30-40	404
40-50	467
50-60	453
60-70	353
70-80	193
80-90	43
90	

LUMINANCE DATA (cd/m²)

Vertical Angle	Horizontal Angles 0	45	90
45	7209	8503	10643
55	7222	9302	12270
65	6651	9268	12587
75	5500	7783	10688
85	3037	4074	5347

ℹ All IES files are available for download at: www.balancedcare.axislighting.com

© 2020 BalancedCare™ by Axis Lighting Inc.
1.800.263.2947 | 514.948.6272
BalancedCare™ by axis
balancedcare.axislighting.com

● PHOTOMETRIC DATA

Exam light right

7700 lm

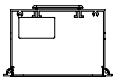

PHOTOMETRIC CURVE

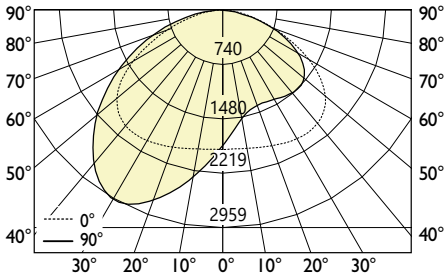

CANDELA DISTRIBUTION

Vertical Angle	Horizontal Angles 0	22.5	45	67.5	90
0	1967	1967	1967	1967	1967
5	1965	1895	1841	1805	1795
15	1981	1796	1666	1594	1574
25	1992	1742	1591	1535	1525
35	1949	1697	1563	1555	1569
45	1786	1594	1498	1539	1578
55	1452	1360	1312	1375	1426
65	991	976	965	1021	1065
75	499	503	508	538	563
85	91	93	98	103	109
90	4	4	4	5	5

ZONAL LUMENS

Zone	Lumens
0	
0-10	189
10-20	578
20-30	972
30-40	1301
40-50	1462
50-60	1389
60-70	1078
70-80	594
80-90	132
90	

Luminaire Lumens: 7697 Lm
Input Watts: 94.46 W
Efficacy: 81 lm/W

IES FILE: BCASY1-4-80-35-RIGHT-EX
TESTED ACCORDING TO IES LM-79-2008

Exam light left

7700 lm

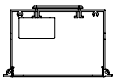

PHOTOMETRIC CURVE

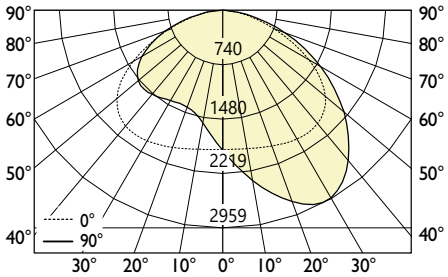

CANDELA DISTRIBUTION

Vertical Angle	Horizontal Angles 0	22.5	45	67.5	90
0	1967	1967	1967	1967	1967
5	1965	1895	1841	1805	1795
15	1981	1796	1666	1594	1574
25	1992	1742	1591	1535	1525
35	1949	1697	1563	1555	1569
45	1786	1594	1498	1539	1578
55	1452	1360	1312	1375	1426
65	991	976	965	1021	1065
75	499	503	508	538	563
85	91	93	98	103	109
90	4	4	4	5	5

ZONAL LUMENS

Zone	Lumens
0	
0-10	189
10-20	578
20-30	972
30-40	1301
40-50	1462
50-60	1389
60-70	1078
70-80	594
80-90	132
90	

Luminaire Lumens: 7697 Lm
Input Watts: 94.46 W
Efficacy: 81 lm/W

IES FILE: BCASY1-4-80-35-LEFT-EX
TESTED ACCORDING TO IES LM-79-2008

All IES files are available for download at: www.balancedcare.axislighting.com

© 2020 BalancedCare™ by Axis Lighting Inc.

1.800.263.2947 | 514.948.6272
BalancedCare™ by axis
balancedcare.axislighting.com

● *PHOTOMETRIC DATA*

Reading light

1132 lm

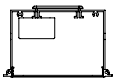

PHOTOMETRIC CURVE

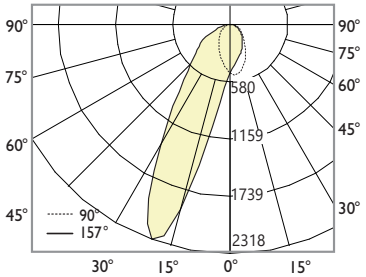

Luminaire Lumens: 1132 Lm
Input Watts: 8.32 W
Efficacy: 136 lm/W

IES FILE: READING_LIGHT.IES
TESTED ACCORDING TO IES LM-79-2008

CANDELA DISTRIBUTION

	Horizontal Angles				
Vertical Angle	**0**	**22.5**	**45**	**67.5**	**90**
0	494	494	494	494	494
5	426	434	451	477	514
15	345	353	371	404	464
25	286	286	292	316	362
35	212	209	212	224	255
45	166	163	164	169	186
55	122	122	123	126	138
65	76	77	79	83	91
75	36	37	39	41	45
85	8	9	10	10	10
90	1	1	1	1	0

ZONAL LUMENS

	Lumens
Zone	
0	
0-10	50
10-20	172
20-30	238
30-40	205
40-50	171
50-60	141
60-70	98
70-80	47
80-90	9
90	

All IES files are available for download at: www.balancedcare.axislighting.com

© 2020 BalancedCare™
by Axis Lighting Inc.

1.800.263.2947 | 514.948.6272

BalancedCare™ by axis
balancedcare.axislighting.com